Commercial Wet Rotor Pump Solutions

WILO

Pumpen Intelligenz.

Cast Iron Closed Loop Circulator
For Hot and Chilled Water Applications

NEW EXPANDED LINE!

Bronze Open Loop Circulator
For Hot and Chilled Water Applications

Top S Series Multi Speed Wet Rotor Circulators

c UL US

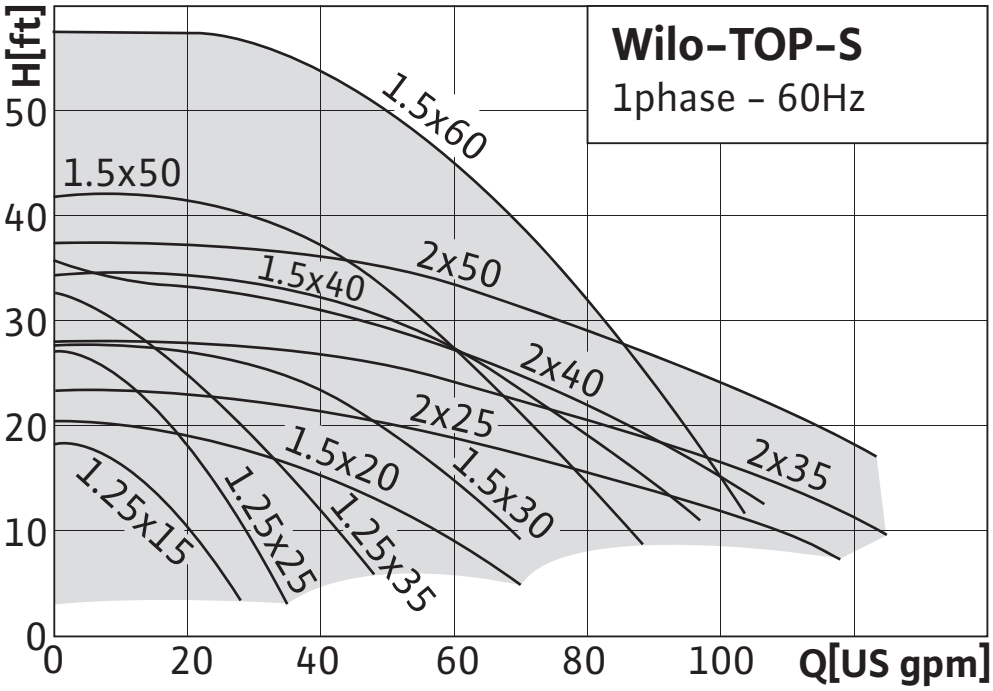

Two Speed
Wet Rotor Circulator

Top S Single Phase Circulator (115v or 230v)

Drawing 1

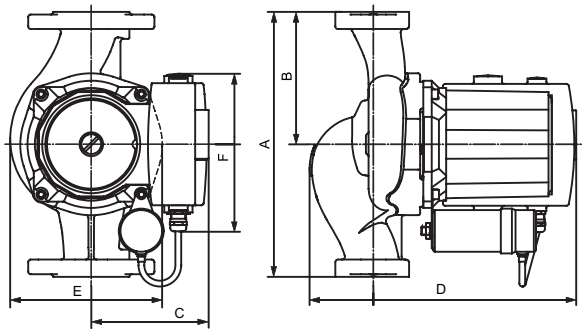

Drawing 3

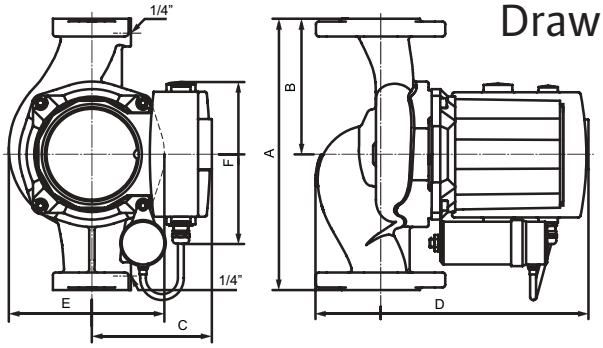

Drawing 5

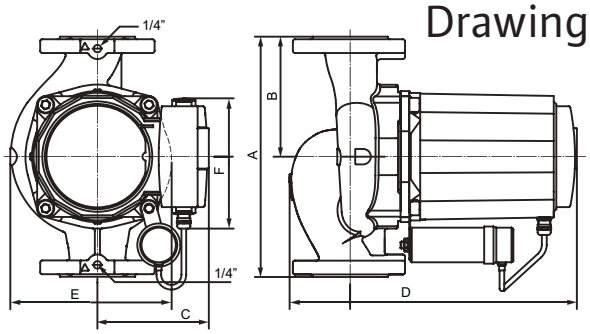

Model	Pump Dimensions												Weight Approx. Net				Dwg #
	A	A	B	B	C	C	D	D	E	E	F	F	Cast Iron		Bronze		
	In	mm	In	mm	In	mm	In	mm	In	mm	In	mm	Lbs	Kg	Lbs	Kg	
1.25 x 15	6 1/2	165	3 1/4	82.5	4 3/16	106	8 15/16	227	4 13/16	121.5	6 1/16	154	14	6	n/a	n/a	1
1.25 x 25	6 1/2	165	3 1/4	82.5	4 3/16	106	8 15/16	227	4 13/16	121.5	6 1/16	154	14	6	n/a	n/a	1
1.25 x 35	8 1/2	216	4 1/4	108	4 7/16	113	9 1/4	235.5	5 1/16	129	6 1/16	154	18	8	n/a	n/a	1
1.5 x 20	10	254	5	127	4 7/16	113	10 1/16	256	5 3/4	146	5 15/16	151	20	9	22	10	3
1.5 x 30	10	254	5	127	4 3/4	120	11 9/16	293	6 5/8	169	5 15/16	151	29	13	31	14	3
1.5 x 40	10	254	5	127	5 1/8	130	13 1/16	331	7 5/16	185	5 15/16	151	41	19	44	20	3
1.5 x 50	10	254	5	127	5 1/8	130	13 1/16	331	7 5/16	185	6 1/16	154	41	19	44	20	3
1.5 x 60	10	254	5	127	5 1/8	130	13 1/16	331	7 5/16	185	6 1/16	154	46	21	49	22	3
2.0 x 25	11	279	5 1/2	139.5	4 3/4	120	12 1/16	307	6 9/16	167	5 15/16	151	34	15	37	17	5
2.0 x 35	11	279	5 1/2	139.5	5 1/8	130	13 1/8	333	7 3/8	187	5 15/16	151	43	20	47	21	5
2.0 x 40	11	279	5 1/2	139.5	5 1/8	130	13 1/8	333	7 3/8	187	6 1/16	154	43	20	47	21	5
2.0 x 50	13 1/2	343	6 3/4	171.5	5 1/8	130	14 7/8	378	7 11/16	195	6 1/16	154	51	23	55	25	5

Two Speed
Wet Rotor Circulator

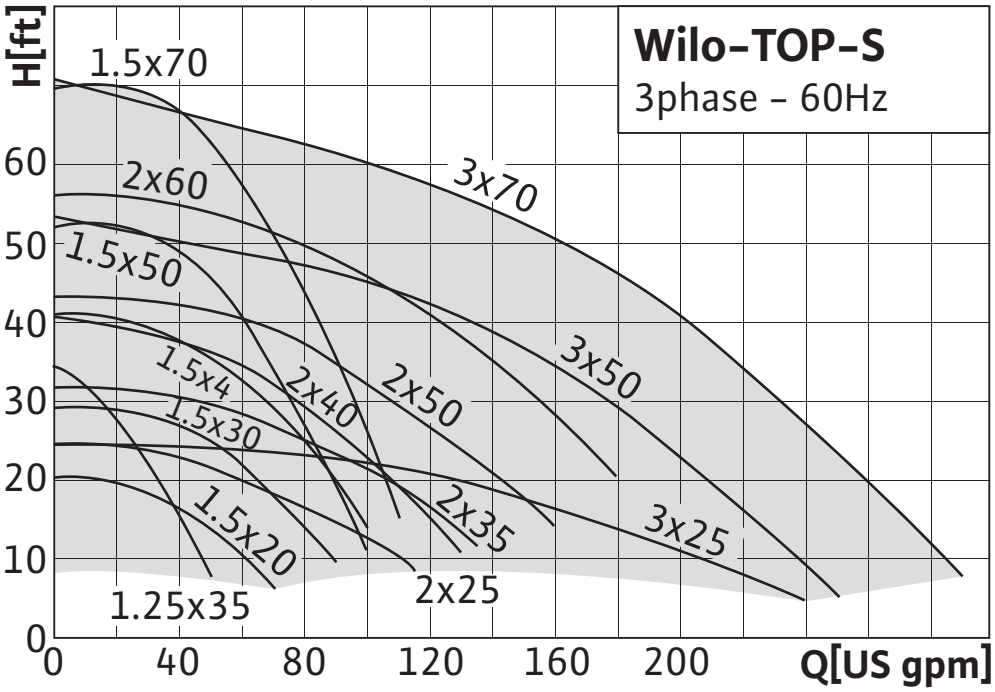

Top S Three Phase Circulator (208/230v, 460v, 575v)

Drawing 2

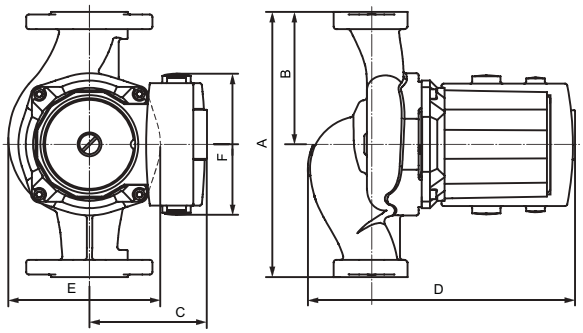

Drawing 4

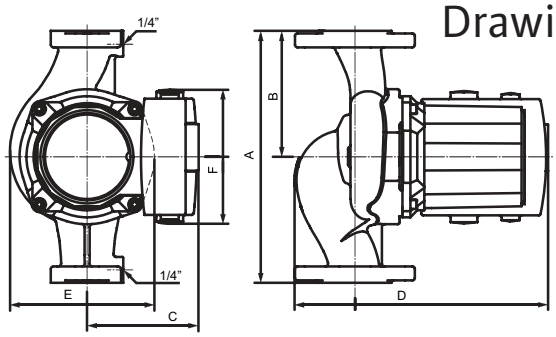

Drawing 6

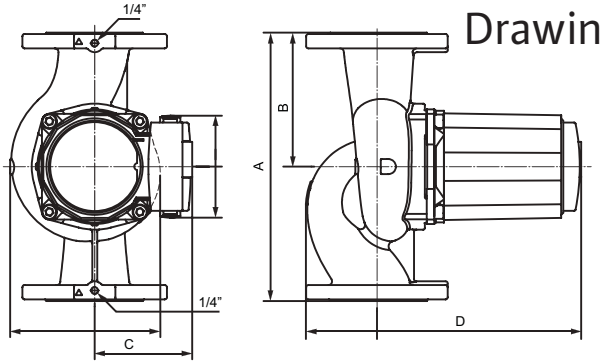

Model	Pump Dimensions												Weight Approx. Net				Dwg #
	A	A	B	B	C	C	D	D	E	E	F	F	Cast Iron		Bronze		
	In	mm	In	mm	In	mm	In	mm	In	mm	In	mm	Lbs	Kg	Lbs	Kg	
1.25 x 35	10	254	5	127	4 3/4	120	11 1/2	293	6 5/8	169	5 5/16	135	18	8	n/a	n/a	2
1.5 x 20	10	254	5	127	4 7/16	113	10 1/16	256	5 3/4	146	5 5/16	135	20	9	22	10	4
1.5 x 30	10	254	5	127	4 3/4	120	11 9/16	293	6 5/8	169	5 5/16	135	27	12	29	13	4
1.5 x 40	10	254	5	127	5 1/8	130	13 1/16	331	7 5/16	185	5 5/16	135	40	18	43	20	4
1.5 x 50	10	254	5	127	5 1/8	130	13 1/16	331	7 5/16	185	5 5/16	135	45	20	48	22	4
1.5 x 70	10	254	5	127	5 1/8	130	13 1/16	331	7 5/16	185	5 1/2	140	45	20	48	22	4
2.0 x 25	11	279	5 1/2	139.5	4 3/4	120	12 1/16	307	6 9/16	167	5 5/16	135	32	15	35	16	6
2.0 x 35	11	279	5 1/2	139.5	5 1/8	130	13 1/8	333	7 3/8	187	5 5/16	135	42	19	46	21	6
2.0 x 40	11	279	5 1/2	139.5	5 1/8	130	13 1/8	333	7 3/8	187	5 1/2	140	42	19	46	21	6
2.0 x 50	13 1/2	343	6 3/4	171.5	5 1/8	130	14 7/8	378	7 11/16	195	5 5/16	135	56	26	60	27	6
2.0 x 60	13 1/2	343	6 3/4	171.5	5 1/8	130	14 7/8	378	7 11/16	195	5 1/2	140	56	26	60	27	6
3.0 x 25	14	356	7	178	6 1/16	154	14 3/8	365	7 13/16	199	5 5/16	135	62	28	69	31	6
3.0 x 50	14	356	7	178	6 1/16	154	19 5/16	491	8 15/16	227	5 5/16	135	95	43	103	47	6
3.0 x 70	14	356	7	178	6 1/16	154	19 5/16	491	8 15/16	227	5 1/2	140	97	44	106	48	6

WILO

Pumpen Intelligenz.

No Mechanical Seal
Quiet Low Maintenance Wet rotor Circulator
Two Speed Operation on all Voltages
Automatically Vented

Cataphoresis Coating Prevents Corrosion
Sturdy Cast Aluminum Electrical Box
Short Flange to Flange Dimension
Most Extensive Wet Rotor Line in the Industry!

New Expanded Line!

Model Number Designation

TOP S 2–25 B

S = Multiple Speed
2 = Flange Size (inches)
25 = Shutoff Head approx. (ft)
B = Bronze Volute
(Cast Iron if no letter)

WILO USA LLC
1290 N 25th Ave.
Melrose Park, IL 60160
1-866-WILO-USA (945-6872)
Fax (403) 277-9456
www.WILO-NA.com

WILO Canada Inc.
Bay 7 - 2915 10th Ave. N.E
Calgary, Alberta, Canada T2A 5L4
1-866-WILO-CDN (945-6236)
Fax (403) 277-9456
www.WILO-NA.com